Power Generation Solar Tile

Product Introduction

Beijing Shan Hu International Technology Co. Ltd.

PART 01

SOLARTILE PRODUCT INTRODUCTION

CIGS Thin film Chip

Superconducting copper wire interconnection

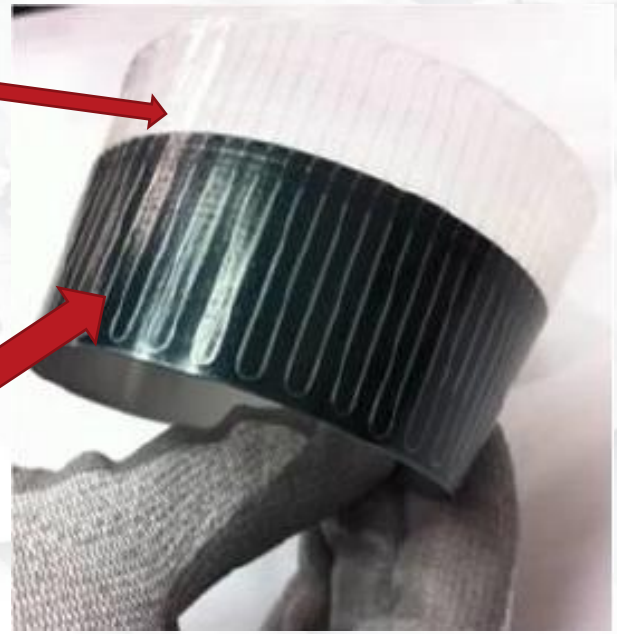

Based on stainless steel plate
Copper Indium Gallium Selenide Chip

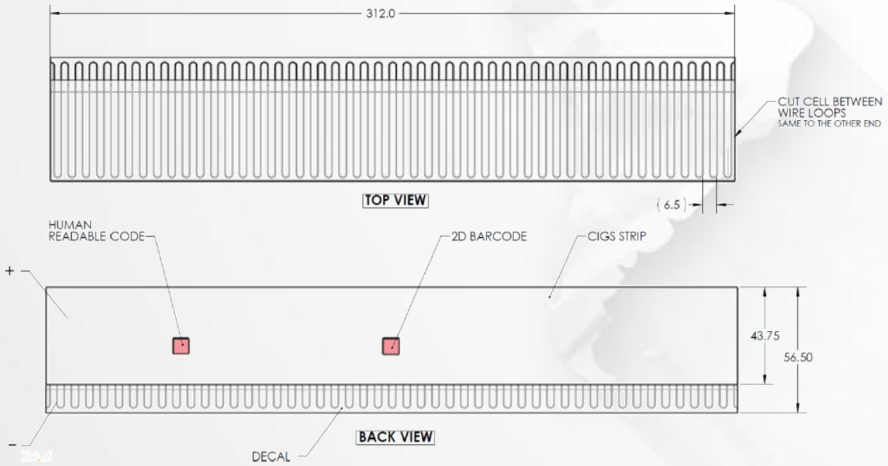

CIGS thin-film solar cells have achieved record-breaking high efficiency on stainless steel substrates. Compared with traditional hard solar cells, they have obvious advantages.

main feature:

Flexible battery conversion efficiency up to 16.5%
As thin as 0.33mm

Lightweight up to 7.5 grams

Ideal for various special purposes, customers can flexibly process the size according to special needs

Flexibility and high shock resistance

Double-glass
Triple-arch Solar tile

Modeling: Three-arch curved surface
Structure: curved ultra-white glass + film + CIGS thin film chip + film + curved glass
Auxiliary materials: edge protection and EPDM tape
Size: 720*500*32mm (W*H*D, without junction box)
Square meter content: 3.48 pieces/square meter
Square meter power: 104 watts
Power: 32watts per pcs
Open circuit voltage: 10.6V Short circuit current: 4A
Working voltage: 8.6V Working current: 3.5A
Product Certification: CQC UL 3C
Single piece weight: 6.5Kg
Packing specification: 1600*1100*700mm 430kg 60 pieces/carton

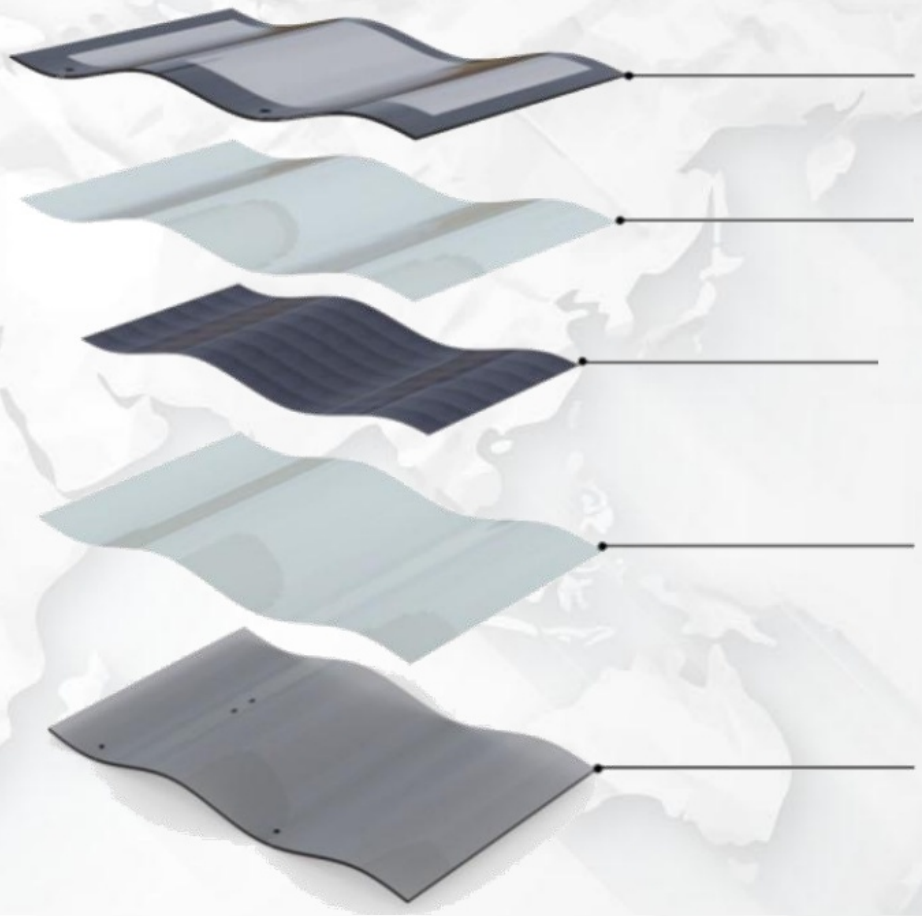

Solar tile testing and certification

Solar tile double 85 test: After placing it in an environmental test box with a temperature of 85 degrees and a humidity of 85% for 1000 hours, the test verifies the heat and humidity resistance of Solar tile.

Solar tile TC200 test: to verify Solar tile's low temperature and high temperature resistance under a temperature difference environment between -40 degrees and 85 degrees.

Solar tile HF (humid-freezing) test: Test and verify Solar tile's resistance to high and low temperature and humidity in a humidity environment of 25 degrees to 85 degrees and 85% and a humidity free environment of -40 degrees to 25 degrees.

Solar tile 3C certification: to verify Solar tile’ s own safety performance, including shot bomb test, falling ball test, heat resistance, humidity resistance, and radiation resistance.

Solar tile fire protection certification: test the fire performance of Solar tile.

Solar tile anti-hail test: simulate the actual size of hail to impact the Solar tile to verify its anti-hail performance.

Solar tile structural advantages

Distributed structure:
roof tile + solar power generation

Solar tile structure: solar power tile

Solving distributed pain points: The calculation life of solar power generation is 25 years, and the life of roof tiles is generally 15 years, which brings great inconvenience to the replacement of roof tiles. Solar tile integrates waterproofing and power generation, with a service life of more than 30 years, which solves the problem of mismatch between the roof structure and the service life of solar power.

Waterproof performance

Edge protection function:
1. Waterproof
2. Protective glass

Solar tile edge protection material: high temperature resistance 100, flame retardant, outdoor life is more than 30 years

Edge protection position: side, purpose-drainage and beauty

Waterproof on the left and right sides of the three-arch Han tile-edge protection

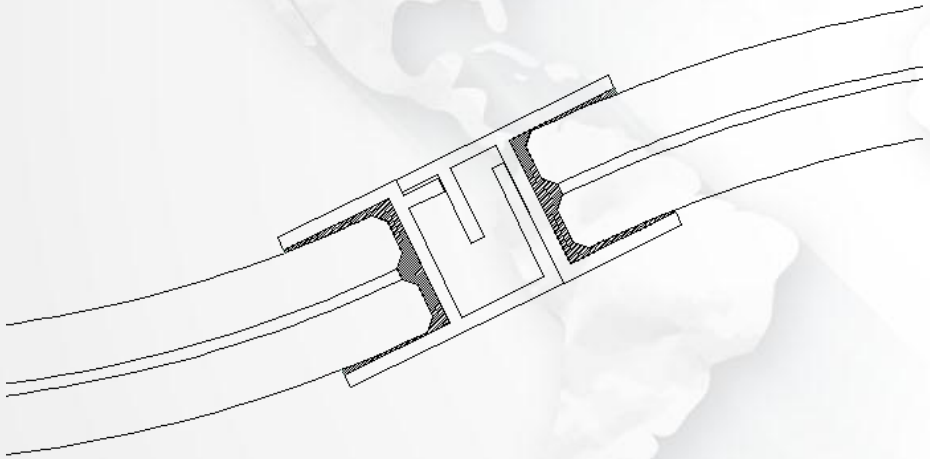

Lapping left and right

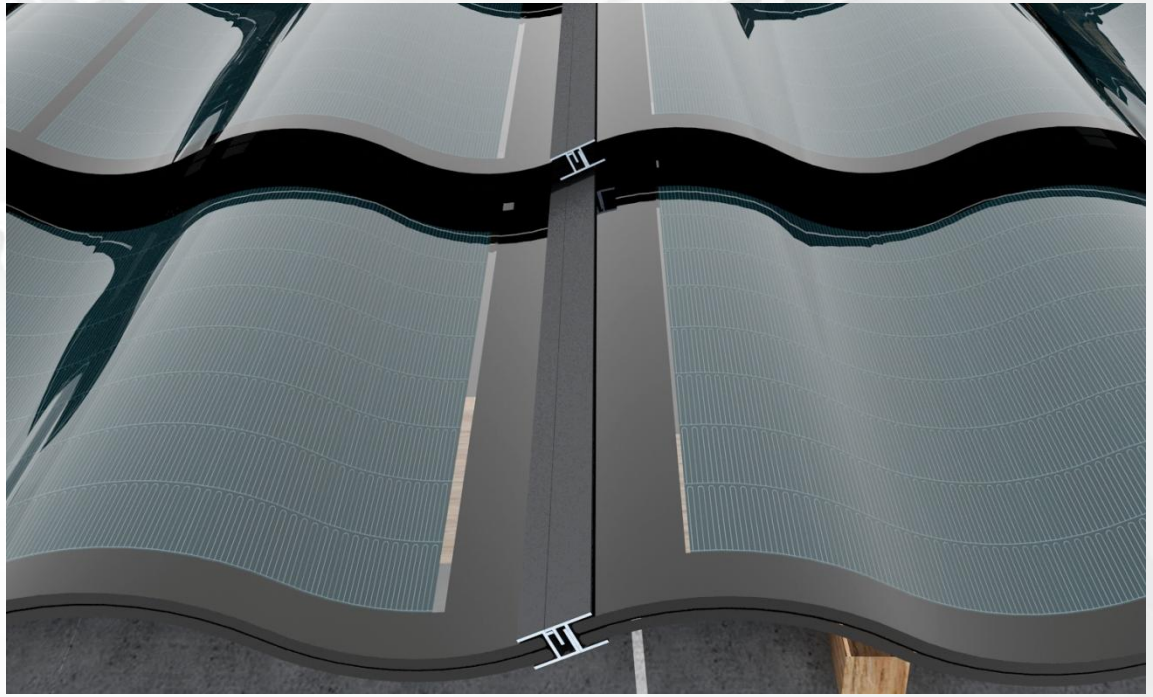

Waterproof performance

Waterproof on the upper and lower sides of Solar tile-adhesive strips

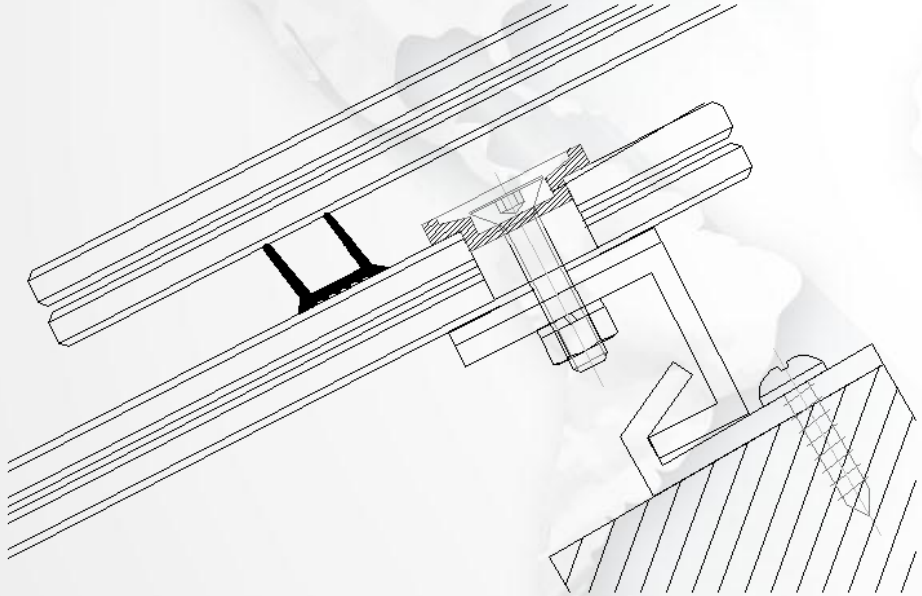

The upper and lower sides are overlapped

Edge protection function: 1. Waterproof 2. Protect the glass to prevent the glass from hitting hard

Solar tile rubber strip material: EPDM, high temperature resistance 100 degrees, flame retardant

In the 1980s, EPDM materials were used extensively on the curtain wall of the building. So far, it has been nearly 40 years ,and the durability has been verified in practice.

Ventilation and heat dissipation

Solar tile back ventilation design:
When the Solar tile is working, the air layer on the back expands and rises due to heat, and the air pressure decreases. The external airflow flows in under the action of atmospheric pressure, forming a circulation of airflow from the outside to the inside.

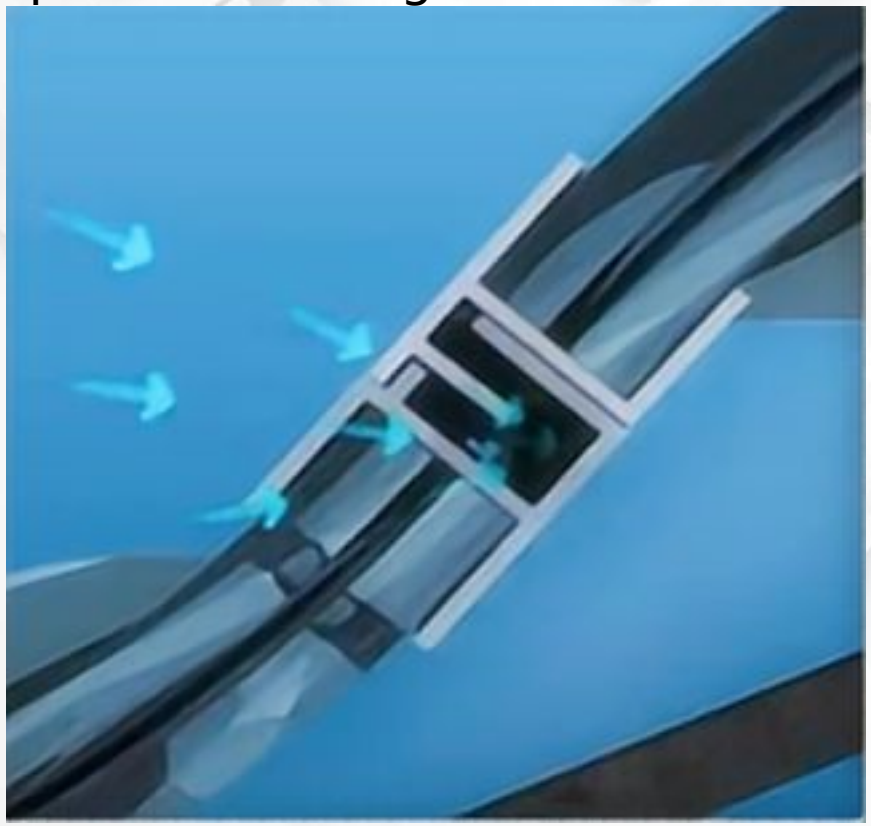

PART 02

SOLAR TILE INSTALLATION STRUCTURE

Hook up

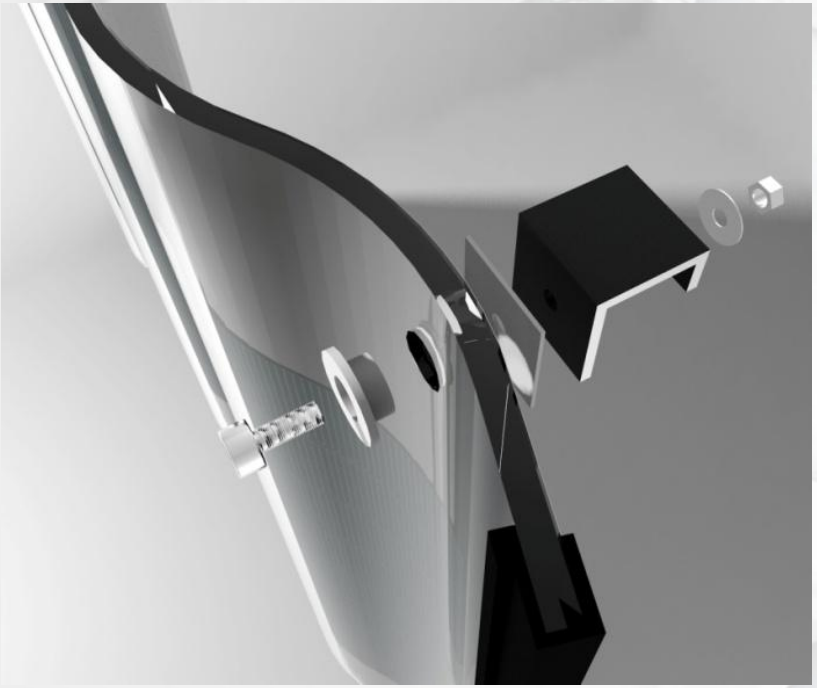

On-site combination of pendants

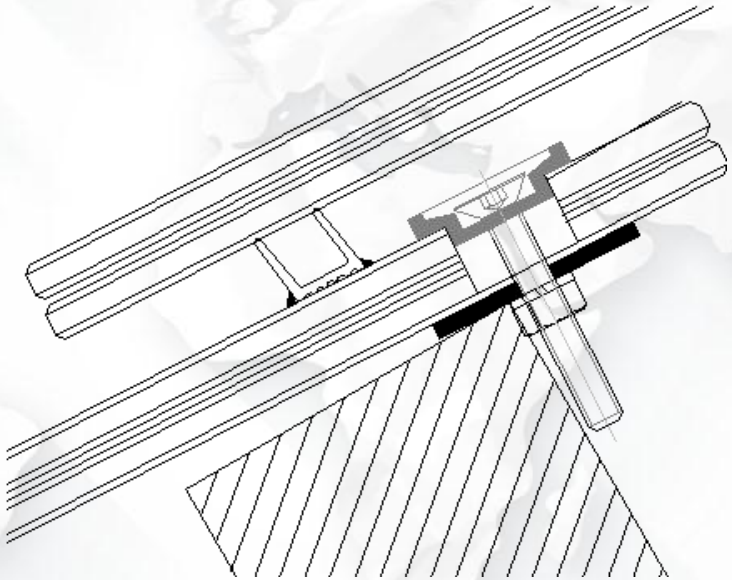

Option One:
Adapt to the roof angle:
15 degrees -40 degrees

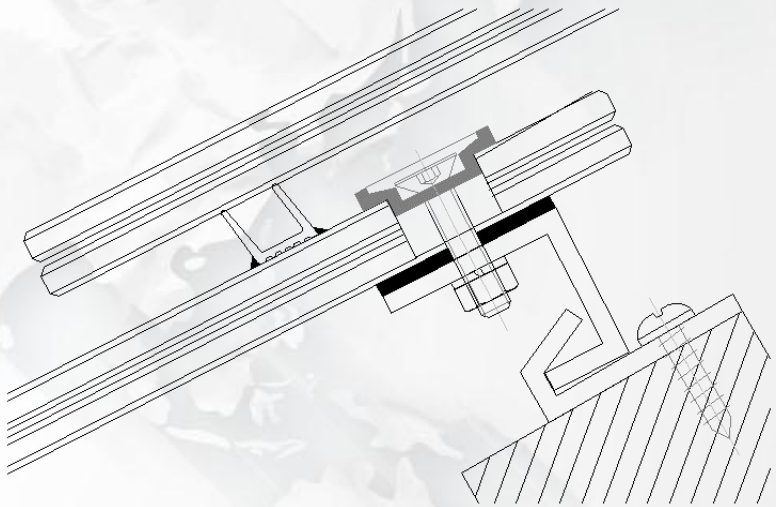

Option II:
Adapt to the roof angle:
40 degrees -75 degrees

Mounting sequence

Solar tile installation order: from left to right, from bottom to top
The Solar tile junction box has a length of 450mm, and the wires of the upper, lower, left, and right junction boxes can be connected.
The spacing of the hanging tiles is 415-420mm, and the upper and lower pieces of the tile are overlapped by 85mm.

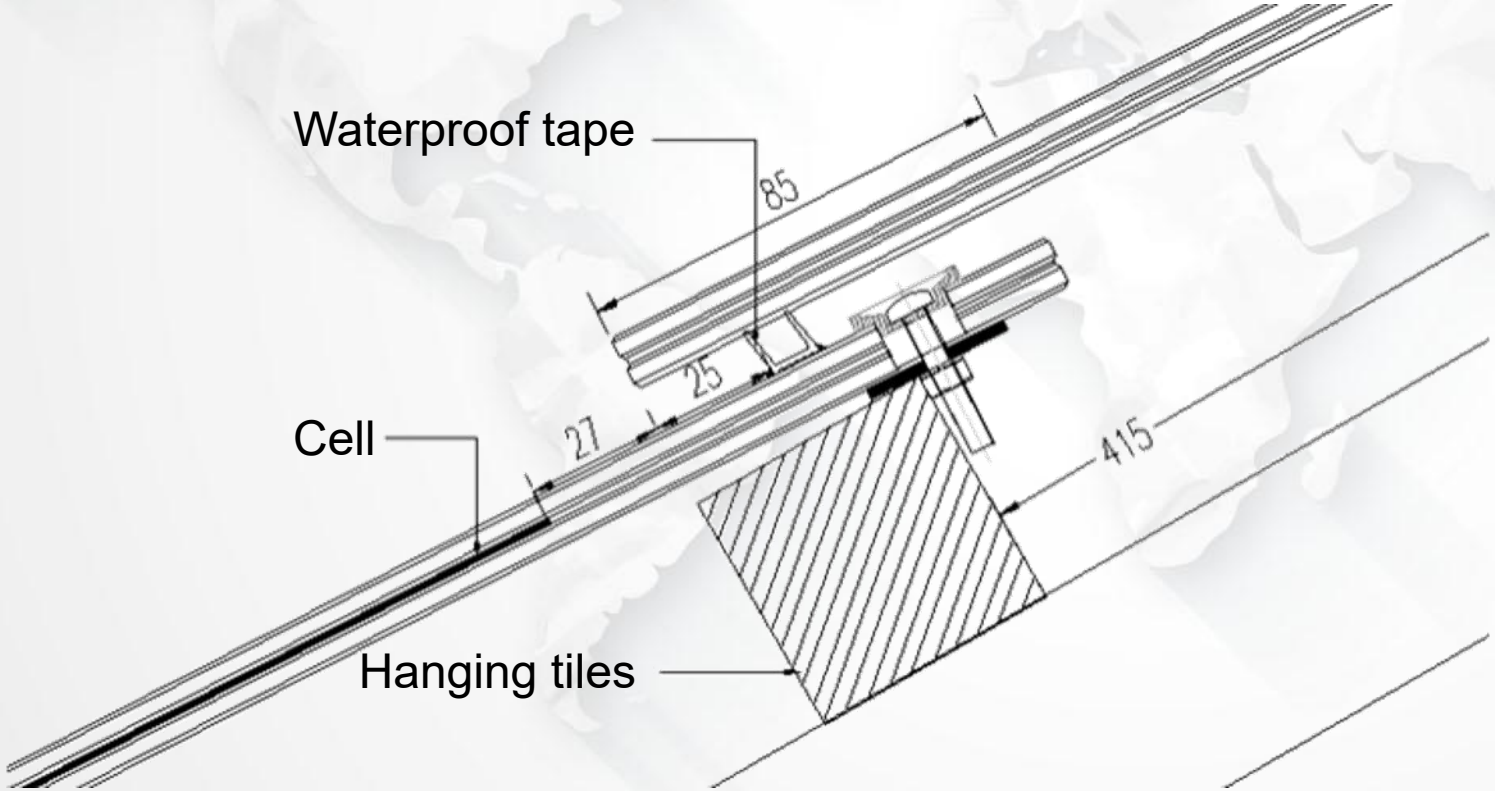

Waterproof test

Solar tile waterproof test bench:

1. The angle of the hanging tile test bench can be adjusted to simulate various roof angles
2. The spray angle of the spray test bench can also be adjusted to simulate wind and rain at various angles

Waterproof effect:

Solar tile water spray test, the water slope is 65 degrees, 55 degrees, 45 degrees, 30 degrees, 23 degrees, 15 degrees.

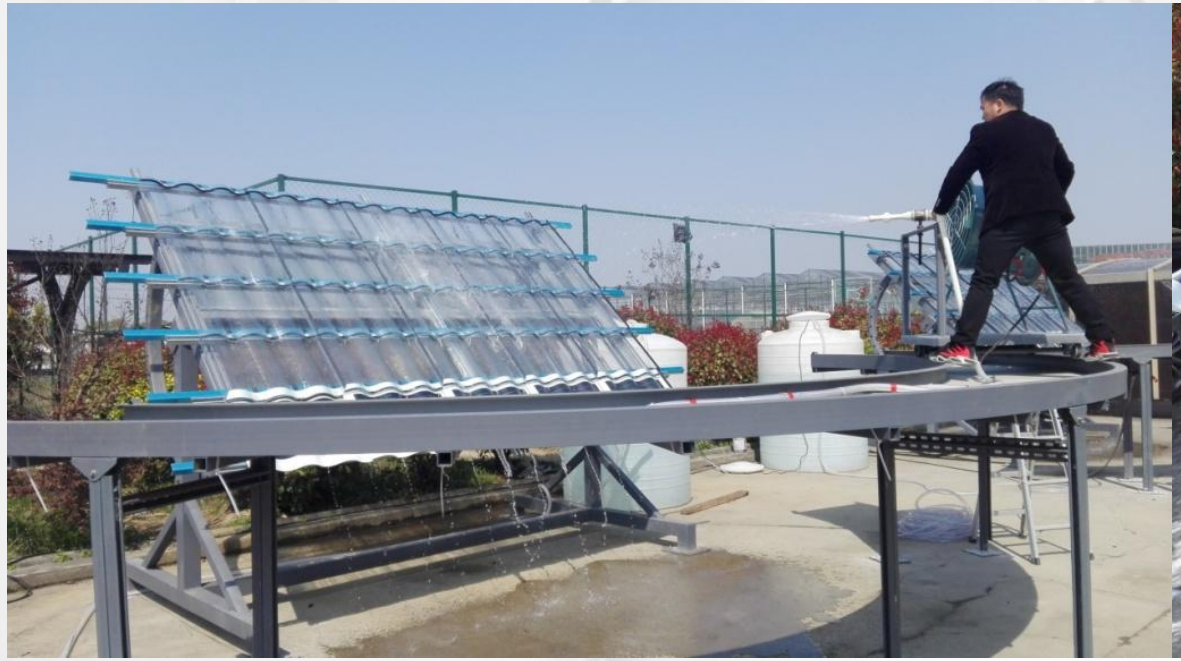

PART 03

COMPANY ADVANTAGE

Edge tile solution

Edge tile material selection: glazed porcelain tile Reasons:
1. The glazed effect of porcelain tiles is similar to the glass effect of Solar tile main tiles
2. Porcelain tiles are more convenient to cut
3. Porcelain tile has low water absorption rate and long service life

South slope open mold and close edge tiles

North slope open mold and close edge tiles

Solar tile model

Villa building plan

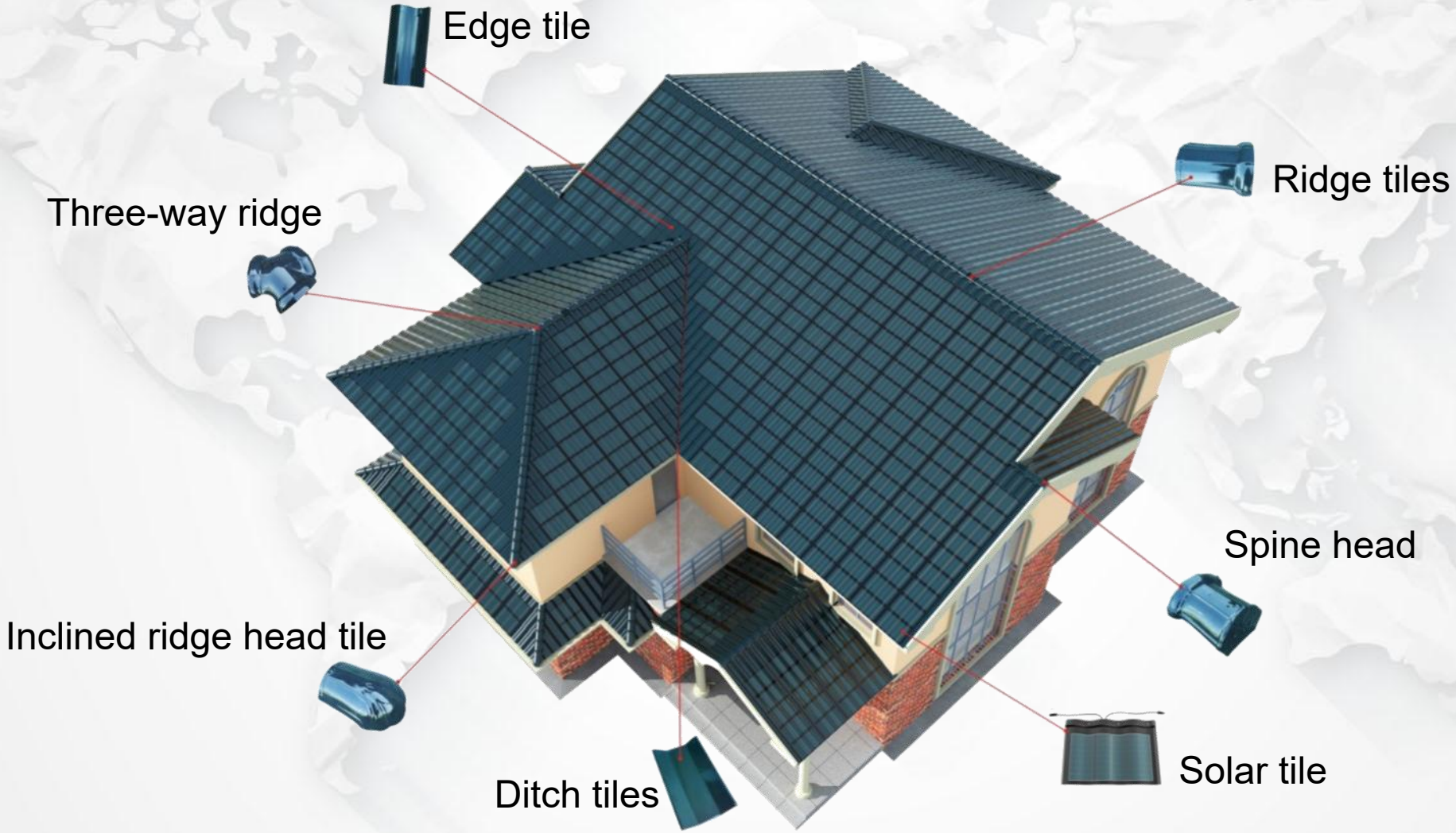

Villa building plan

Part of the list of tiles used in the overall solution of villa style three-arch curved Han tiles

Solar tile`	500mm（L）*710mm（W）*40mm（Arch height)	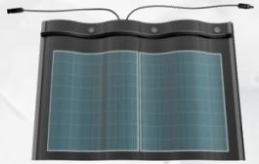
Edge tile	500mm（L）*245mm（W）*40mm（Arch height)	
Ridge tiles	280mm（L）*200mm（W）*65mm（Arch height)	
Three-way ridge	150mm（Three sides）*200mm（W）*65mm（Arch height)	
Spine head	250mm（L）*200mm（W）*65mm（Arch height)	
Ditch tiles	390mm（L）*230mm（W）*45mm（Arch height)	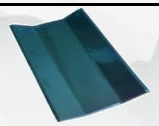
Inclined ridge head tile	300mm（L）*185mm（W）*65mm（Arch height)	

Butt seam installation

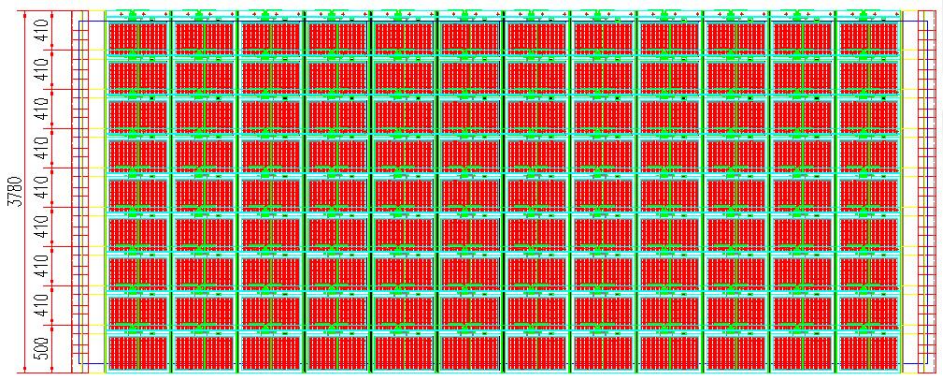

108 pcs

105 pcs

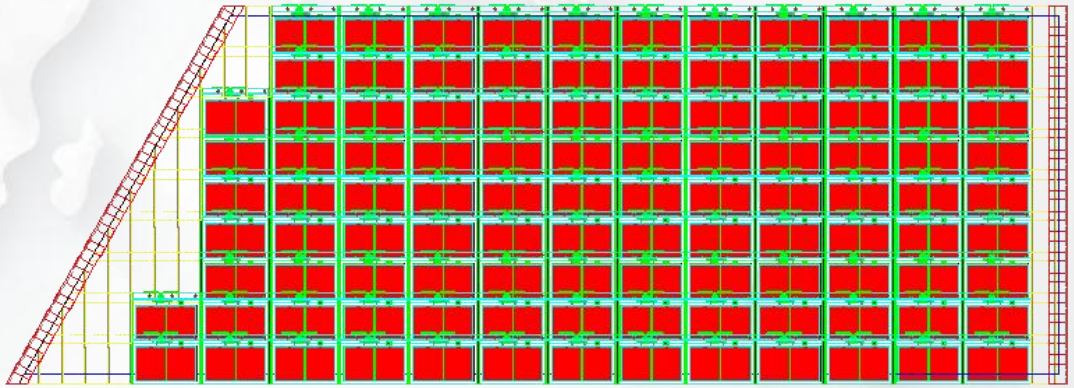

108 pcs

Concrete roof

Step 1 : Measure and pay off the line, install the water line and hang the tile

Concrete roof

Step 2: Install Solar tile (order: from left to right, from bottom to top, Install the hook when the roof slope is 40°—75°,)

Concrete roof

Step 3 : install the edge tiles and ridge tiles

Steel structure roof

Step 1: Install the steel frame

Steel structure roof

Step 2 : paving the plank

Steel structure roof

Step 3: Lay a 0.5mm thick galvanized steel sheet on the board

Steel structure roof

Step 4: Install the hanging tile

Steel structure roof

Step 5: Install Solar tile (order: from left to right, from bottom to top, Install the hook when the roof slope is 40°—75°,)

Steel structure roof

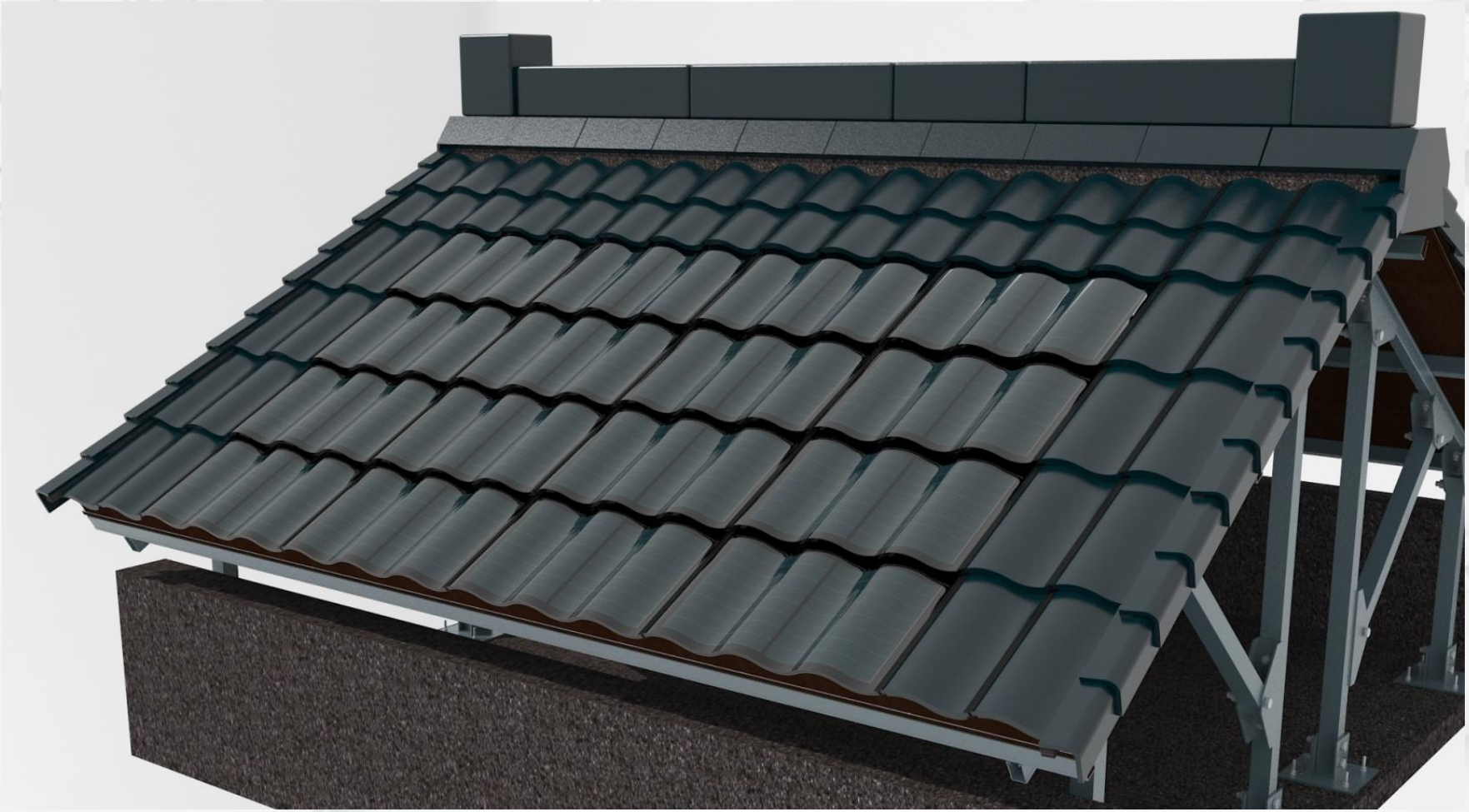

Step 6: Install the edge tiles and ridge tiles

Wooden structure roof

Step 1: Install the wooden structure

Wooden structure roof

Step 2: Laying wooden boards

Wooden structure roof

Step 3: Lay a 0.5mm thick galvanized steel sheet on the board

Wooden structure roof

Step 4: Install the hanging tile

Wooden structure roof

Step 5: Install Solar tile (order: from left to right, from bottom to top, Install the hook when the roof slope is 40°—75°,)

Wooden structure roof

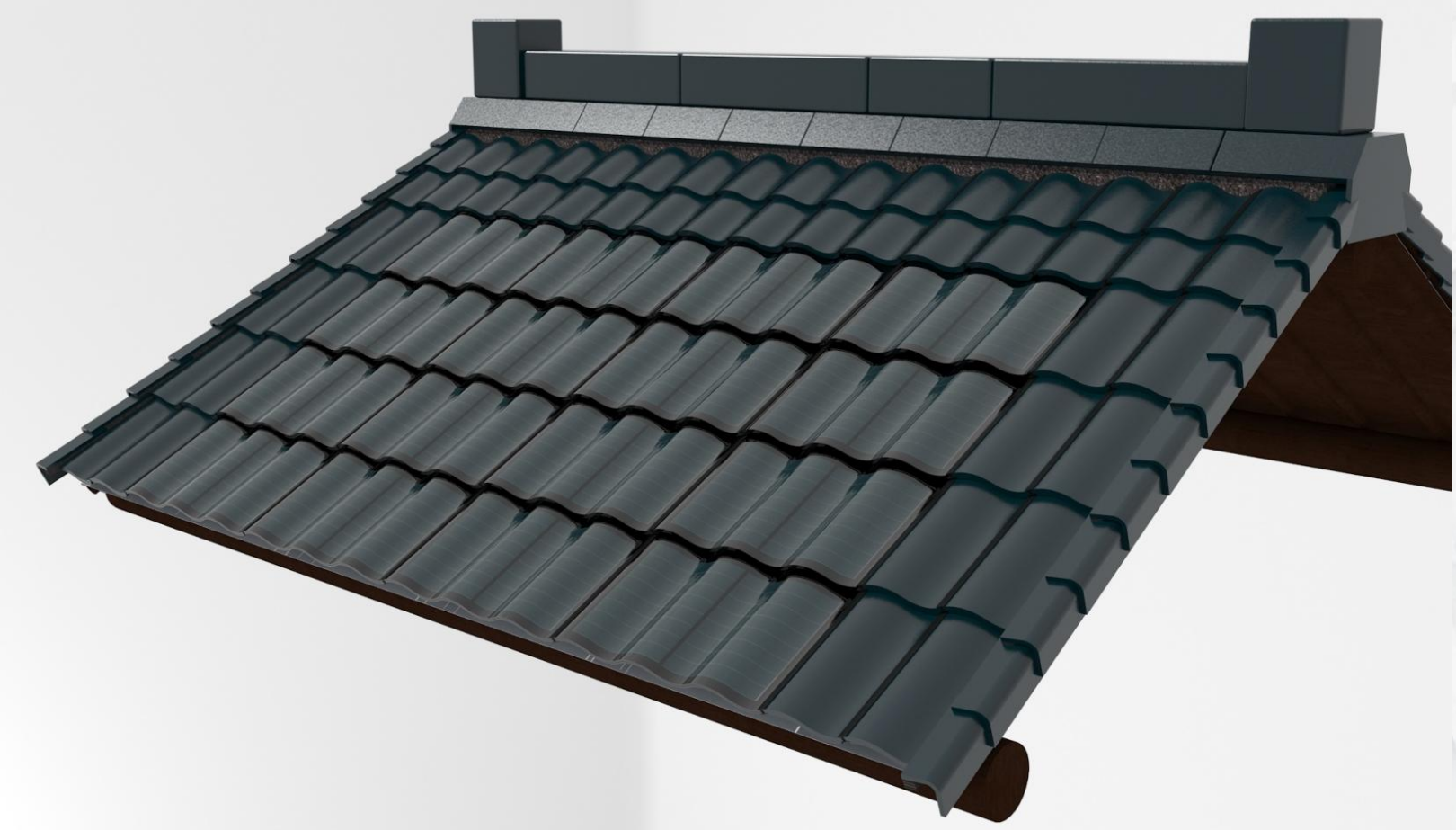

Step 6: Install the edge tiles and ridge tiles

Installation Precautions

Joint of roof ridge and tile

Rough connection

After modification

Installation Precautions

Solar tile installation avoids hard problems

When installing, pay attention to Solar tile not to directly contact with rigid materials, and use soft connection for Solar tile installation. Pay attention to the soft isolation during installation and storage, and put soft gaskets on the parts contacting Solar tile during storage.

PART 03

PROJECT CASES

Changde Villa
Solar Tile Project

Completion time:
October 2017
Application product:
Three-arch Solar tile
Installed capacity:
15 kilowatts

Heyuan Antique Building Solar Tile Project

Completion time:
January 2018
Application product:
Single-arch C-shaped
Solar tile
Installed capacity:
6 kilowatts

Villa Solar Tile Project in Si County, Anhui

Completion time:
July 2017
Application product:
Three-arch Solar tile
Installed capacity:
15 kilowatts

Beijing C i t y
Solar tile Project

Completion time:
January 2018
Application product:
Three-arch Solar tile
Installed capacity:
20 kilowatts

Changshu Yongfeng Solar tile Project

Completion time:
October 2017
Application product:
Three-arch Solar tile
Installed capacity:
15 kilowatts

Dalian Solar tile Project

Completion time:
January 2018
Application product:
Three-arch Solar tile
Installed capacity:
3 kilowatts

Zhejiang Hangzhou Solar tile Project

Completion time:
December 2017
Application product:
Three-arch Solar tile
Installed capacity:
15 kilowatts

THANKS